0.05" X 0.05"(1.27 X 1.27mm) Pin Header

Dual Row 06 to 100 Contacts

SMT Type

SPECIFICATION

Current Rating	: 1 Amp
Insulator Resistance	: 1000 Megohms min.
Contact Resistance	: 20 Milliohms Max.
Dielectric Withstanding	: AC 500 V
Operating Temperature	: -40°C ~ +105°C
Max Processing Temp	: 230°C For 30~60 Seconds (260°C For 10 Seconds)
Contact Material	: Brass
Insulator Material	: Polyester, UL 94V-0 Standard : Nylon-6T
Contact Plated	: Full Gold, Full Tin, Selective Plated

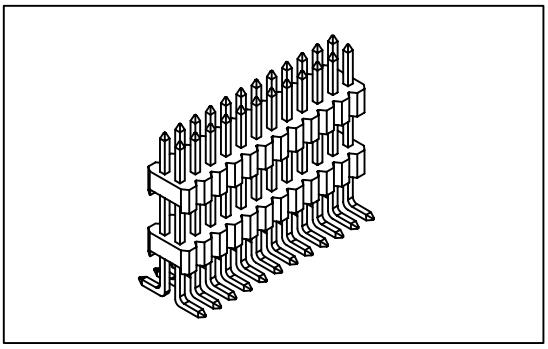

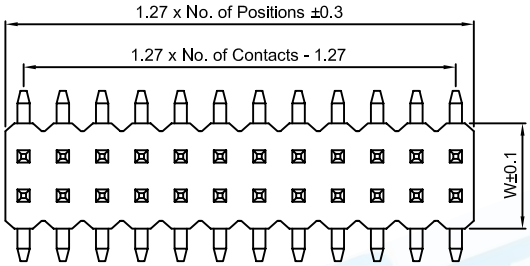

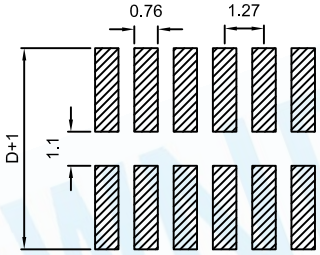

P.C.B Layout

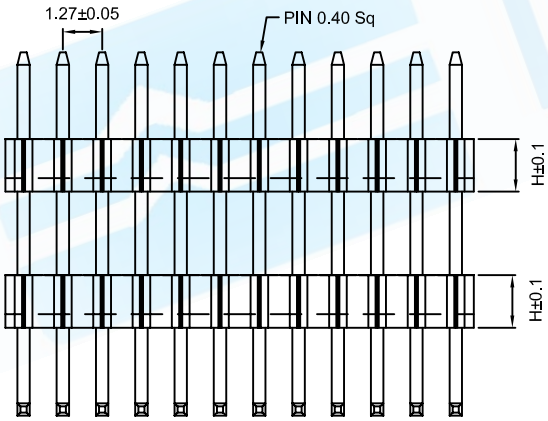

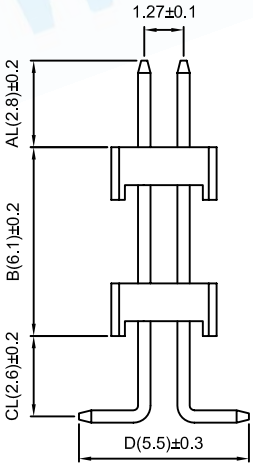

HOW TO ORDER

P104 - 3 2 * XX M XX XX-X-X-X

- Series No.
- Series of No. 3 : P1.27
- Row Type 2 : 2 Rows
- No. of Contact Per Row
- Terminal Type M : SMT Type
- Contact Plated
- Terminal Type 01, 02, :
- 0:W/O Locating Peg; 1:W/ Locating Peg
- 1:H=2.54mm W=3.0mm SQ0.4; 2:H=2.54mm W=3.4mm SQ0.4; 3:H=2.10mm W=3.0mm SQ0.4; 4:H=2.00mm W=3.4mm SQ0.4; 5:H=1.00mm W=3.4mm SQ0.4; 6:H=1.50mm W=3.4mm SQ0.4; 7:H=1.70mm W=3.0mm SQ0.4; 8:H=1.70mm W=3.4mm SQ0.4; 9:H=0.80mm W=3.4mm SQ0.4; 10:H=0.65mm W=3.0mm SQ0.4; 11:H=2.54mm W=5.0mm SQ0.46
- Packing Type
  - A : In Tube
  - B : W/Cap(Clip) In Tube
  - C : W/Cap(Clip) In Tube & Reel

Full Gold Type	Selective Plated Type Gold Plated on Contact Area Tin Plated on Solder Area	Full Tin Type
GF : Gold Flash	HF : Gold Flash, Tin 100u"	T1 : Tin 100u"
G1 : Gold 3u"	H1 : Gold 3u", Tin 100u"	T2 : Tin 200u"
G2 : Gold 5u"	H2 : Gold 5u", Tin 100u"	
G3 : Gold 10u"	H3 : Gold 10u", Tin 100u"	
G4 : Gold 15u"	H4 : Gold 15u", Tin 100u"	
G5 : Gold 20u"	H5 : Gold 20u", Tin 100u"	
G6 : Gold 30u"	H6 : Gold 30u", Tin 100u"	