SECURE DIGITAL MEMORY CARD
TOP MOUNT W/PUSH PUSH TYPE

Specifications:

Current Rating:0.5 Amp
Voltage Rating:100V AC/DC
Contact resistance:100m Ohm Max
Insulator resistance:1,000M ohm min.
Withstanding Voltage:500V AC/Minute
Operating Temperature Range:-20°~+85°C

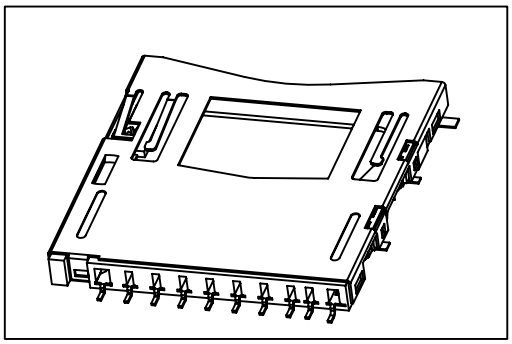

Material And Finish

Insulator:Polyester(UL 94V-0)
Standard:LCP
Contact:Copper Alloy
Contact Plated:Selective Gold plated(standard)
Shell:Stainless steel

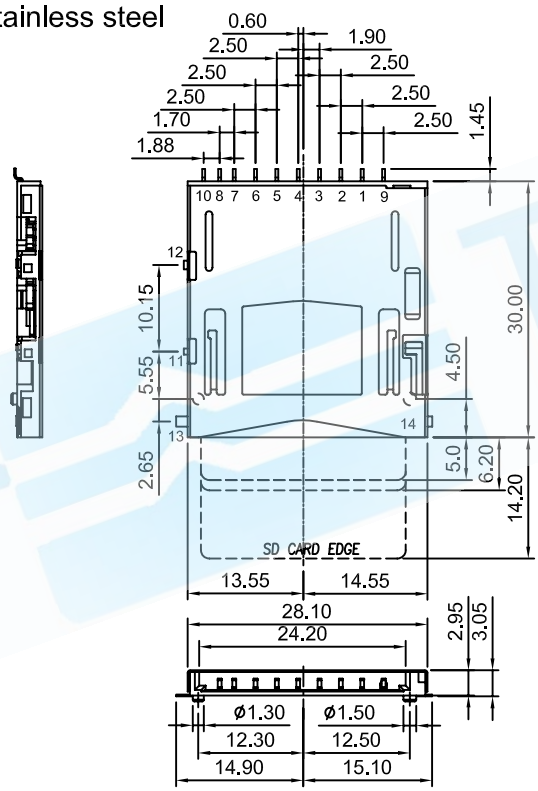

SD-09MXX-001-00

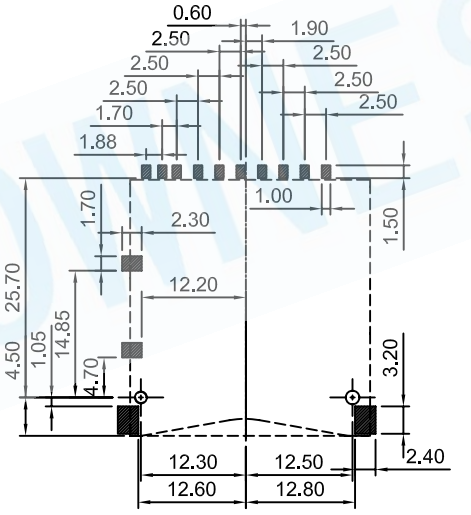

Recommended PCB Layout

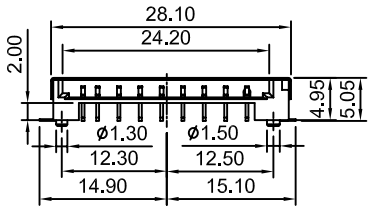

SD-09MXX-001-20

SD CARD PIN DESIGN

Pin No.	Name	Description
1#	CD/DAT3	Card detect/Data I/O
2#	CMD	Command
3#	VSS1	Ground
4#	VDD	Power
5#	CLK	Clock
6#	VSS2	Ground
7#	DAT0	Data I/O
8#	DAT1	Data I/O
9#	DAT2	Data I/O

Protect Swicth		Card Detecion	
Protection Lock	Protection Unlock	Without Card	Inserted Card
11 — 12 GND	11 — 12 GND	10 — 12 GND	10 — 12 GND

PIN10--Detection
PIN11--Protect Swicth:Write Enable Psition:On,Lock Position:Off
PIN12--Swicth Contact:It Use For Connect Detcte Switch And Protect Swicth
PIN13--Mounting:It Connected To
PIN14--Metal Cover,That Use For Frame Ground Only

How To Order

SD-09MXX-001-XX

- 00:Stand off 0mm
- 20:Stand off 2.0mm
- Code
- Contact Plated
- With Cover Shell
- No. Of Positions

Contact Plated

Full Gold Type	Selective Plated Type Gold Plated on Contact Area Tin Plated on Solder Area	Full Tin Type
GF : Gold Flash G1 : Gold 3u" G2 : Gold 5u" G3 : Gold 10u" G4 : Gold 15u" G5 : Gold 20u" G6 : Gold 30u"	HF : Gold Flash, Tin 100u" H1 : Gold 3u", Tin 100u" H2 : Gold 5u", Tin 100u" H3 : Gold 10u", Tin 100u" H4 : Gold 15u", Tin 100u" H5 : Gold 20u", Tin 100u" H6 : Gold 30u", Tin 100u"	T1 : Tin 100u" T2 : Tin 200u"